** PROPRIETARY DATA **
THIS DOCUMENT CONTAINS DATA WHICH IS PROPRIETARY OR CONFIDENTIAL TO WV COMM (WV COMMUNICATIONS INCORPORATED). THIS DOCUMENT AND THE DATA CONTAINED HEREIN SHALL NOT BE USED, DUPLICATED, OR ALTERED WITHOUT THE EXPRESED WRITTEN CONSENT OF WV COMM. ALL RIGHTS ARE RESERVED.

REVISIONS				
ZONE	REV	DESCRIPTION	DATE	APPROVED
	A	PRELIMINARY RELEASE		

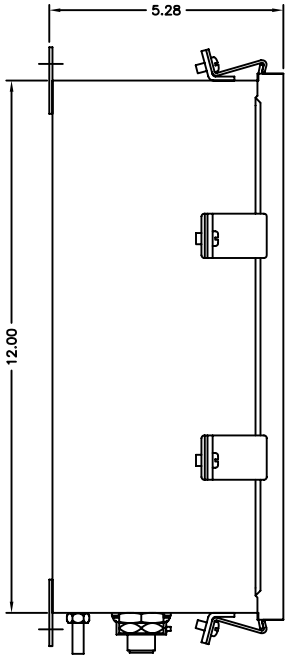

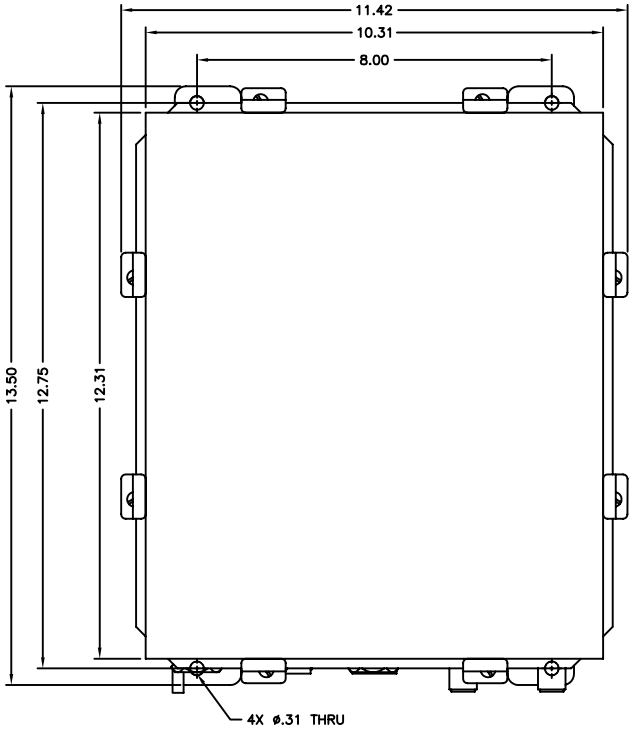

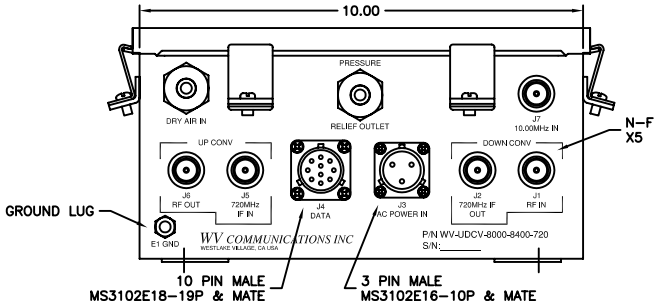

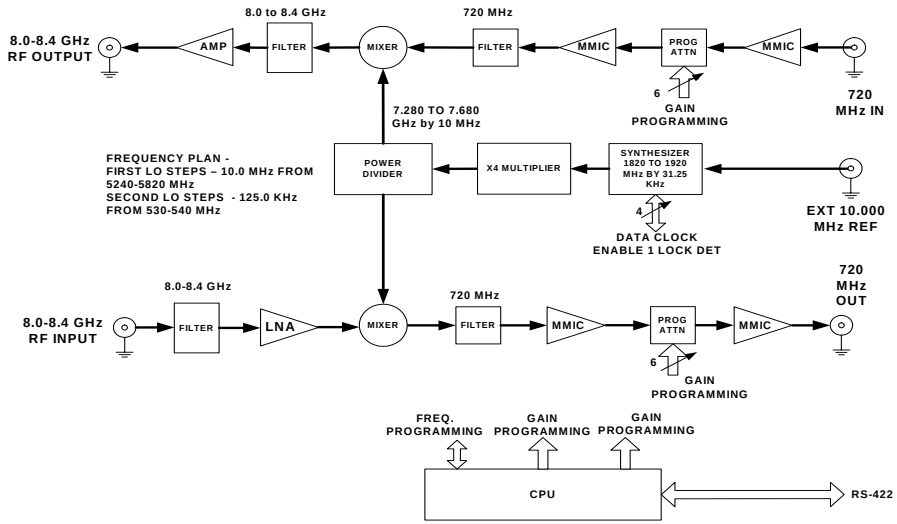

(1)Down-RF Input Frequency Range:	8000.0 to 8400.0MHz
(1) Up-RF Input Frequency Range:	720MHz +/-20MHz
Down-IF Output Frequency:	720 +/- 70 MHz
Up-Output Frequency:	8000.0 to 8400.0MHz
LO Frequency Tuning Increments:	125.0 KHz increments
Input and Output VSWR:	1.5:1 Maximum
Input and Output Impedance:	50 Ohms nominal
Down-Gain (RF to IF):	60dB Minimum
Up-Gain (IF to RF):	40dB Minimum
Gain Adjustment Steps/Range:	0.5dB Nominal/30dB Minimum
LO Leakage:	-70 dBm Maximum
Noise Figure:	15dB Maximum
RF Output 1dB Comp Point:	+10dBm Minimum
LO Frequency Stability:	Per External 10.000MHz Reference
External Reference:	10.000MHz @ +10dBm Min
Phase Noise:	**Offset** / **Maximum**
	10 Hz: -40dBc/Hz
	100 Hz: -50dBc/Hz
	1 KHz: -60dBc/Hz
	10 KHz: -70dBc/Hz
	100 KHz: -100dBc/Hz
	1 MHz: -120dBc/Hz
	***Based on Instrument Grade 10.000MHz Reference with Typical Phase Noise:**
	1Hz -70dBc/Hz Min
	10Hz -100dBc/Hz Min
	100Hz -125dBc/Hz Min
	1000Hz -135dBc/Hz Min
Image Rejection:	70 dB Minimum
Spurious Outputs:	60dBc Maximum (Signal Related)
Remote Control:	Via RS-422
ON/OFF Control Up Converter:	Short–Off, Open On
Temp Non-Operating:	-54 to +71C
Temp Operating:	-30 to +55C
Humidity-Including Condensation:	Up to 100%
Rain:	Up to 4 inches per Hour
Ice:	One-half inch Radial
Warm-Up Time:	10 Minutes Typical
Input Power/Frequency:	85-264VAC Auto-range 2 Amp Maximum, 47-440Hz

AC POWER

CONN	NOMENCLATURE
J3–A	115/230VAC HOT
J3–B	115/230VAC NEUTRAL
J3–C	SAFETY GROUND

RS–422 INTERFACE

CONN	NOMENCLATURE
J4–A	N/U
J4–B	N/U
J4–C	N/U
J4–D	Rx+
J4–E	Rx–
J4–F	RTN
J4–G	Tx+
J4–H	Tx–
J4–J	N/U
J4–K	N/U

NEXT ASSEMBLY	USED ON
APPLICATION	DO NOT SCALE DRAWING

APPROVALS	DATE
DRAWN G. GODDARD	18NOV02
CHECKED	
ENGR MGR	
MFG MGR	
Q/PA	
APPROVED	

WVCommunications 756–A LAKEFIELD RD. WESTLAKE VILLAGE, CA

UP/DOWN CONVERTER,
8000–8400 MHz TO 720MHz
P/N WV–UDCV–8000–8400–720

SIZE	CAGE CODE	DWG. NO.	REV
D	1GFQ7	050–50331	A

SCALE NONE SHEET 1 OF 1

SIZE A DWG NO. 050–50331 REV A