** PROPRIETARY DATA **
THIS DOCUMENT CONTAINS DATA WHICH IS PROPRIETARY OR CONFIDENTIAL TO WV COMM (WV COMMUNICATIONS INCORPORATED). THIS DOCUMENT AND THE DATA CONTAINED HEREIN SHALL NOT BE USED, DUPLICATED, OR ALTERED WITHOUT THE EXPRESSED WRITTEN CONSENT OF WV COMM. ALL RIGHTS ARE RESERVED.

REVISIONS				
ZONE	REV	DESCRIPTION	DATE	APPROVED
	A	RELEASED	2-01-05	J.M.

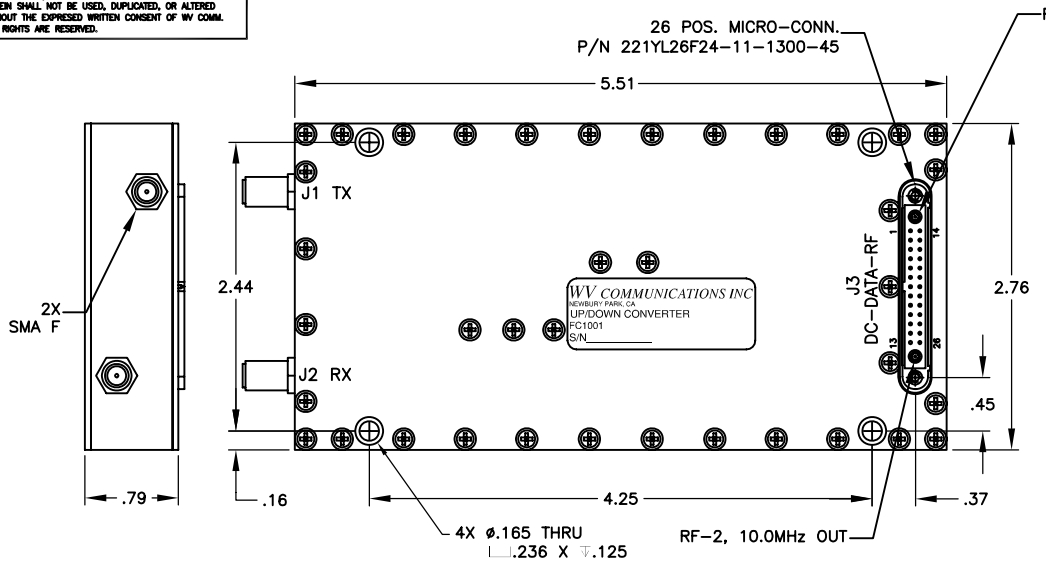

J3 — DC-DATA-RF	
PIN NO.	DESIGNATION
1	V-BAT-P
2	V-BAT-P
3	V-BAT-P
4	GND
5	TX-ON-OFF
6	RS-232-TX
7	RS-232-RX
8	RS-232-CLK
9	TX-I-IN-H
10	TX-Q-IN-H
11	SPR4
12	AGC-CONT-IN
13	SPR6
14	V-BAT-N
15	V-BAT-N
16	V-BAT-N
17	GND
18	RX-ON-OFF
19	SPR1
20	SPR2
21	SPR3
22	TX-1-IN-L
23	TX-Q-IN-L
24	TCXO-V-IN
25	Option-TCXO-ADJ
26	UDC Reset
RF-1	RX-IF-OUT
RF-2	TCXO-OUT

CONNECTOR TABLE	
REF DESIG.	FUNCTION
J1	RF INPUT
J2	RF OUTPUT
J3	DCD-DATA-RF

TX Specifications

TX FREQUENCY BAND:	13.75-14.5GHz
FREQUENCY STEP:	125.0KHz Nominal
RF POWER OUTPUT:	+33dBm Minimum (2W)
FREQUENCY STABILITY:	10.00MHz ±0.5ppm Maximum Over Temperature
FREQUENCY SWITCHING TIME	0.5mSec Maximum
MODULATION:	QPSK
I/Q DATA INPUT LEVEL:	0.5 – 0.8 Volt RMS
UN-CODED DATA RATE:	1MBps
POWER CONTROL RANGE	15.5dB in 0.5dB steps Nominal
POWER GAIN VARIATION	0.6 dB p-p Maximum
HARMONICS	-60dBc Maximum
SPURIOUS LEVEL	-50dBm Maximum
OUTPUT IMPEDANCE	50 Ohm
OUTPUT VSWR	2:1 Maximum (Ref 50 Ohm)
OUTPUT SSB NOISE	-75dBc Maximum @ 1KHz Offset -85dBc Maximum @ 10KHz Offset -95dBc Maximum @ 100KHz Offset -115dBc Maximum @ 1MHz Offset
OUTPUT NOISE LEVEL	-140 dBm/Hz Maximum
DUTY CYCLE	25%
LO LEAKAGE	-30dBc Maximum
TCXO VOLTAGE	3.3±0.1 Volt at 3.0mA Maximum
ON / OFF CONTROL	TTL "0" = On TTL "1" = Off
DC VOLTAGE & CURRENT:	5.6Vdc to 7.6Vdc at 1.4A

RX Specifications

RX FREQUENCY BAND:	10.7 to 11.7GHz & 11.7-12.75GHz
FREQUENCY STEP:	125.0KHz Nominal
FREQUENCY SWITCHING TIME	0.5 mSec Maximum
LO 1 FREQUENCY:	8.8 to 10.8 GHz in 10.0MHz Steps
LO 2 FREQUENCY:	1820.0 to 1830.0 MHz in 125.0KHz
MODULATION	QPSK
L-BAND OUTPUT GAIN	30dB Minimum
70MHZ IF OUTPUT GAIN	50 to 80 dB Nominal User Controlled
70MHZ IF FILTER:	3dB BW 0.5MHz Nominal 35dB BW 1.28MHz
DYNAMIC AGC	30dB Min
IF AGC CONTROL INPUT	0 - 3V/1mA Maximum
NOISE FIGURE:	2dB Maximum at +25C
LO SSB NOISE:	-75dBc Maximum @ 1KHz Offset -85dBc Maximum @ 10KHz Offset -95dBc Maximum @ 100KHz Offset -115 @ Maximum 1MHz Offset
1dB COMPRESSION	+10dBm at the 70MHz IF output Port
GAIN VARIATION	±5dB Maximum
SPURIOUS	-60dBm Maximum
IMAGE REJECTION	40dBc Minimum
IF HARMONICS	-40dBc Minimum
INPUT/OUTPUT IMPEDANCE	50 Ohm Nominal
INPUT VSWR	2:1 Maximum (Ref 50 Ohm)
TX REJECTION	50dB Minimum
RX SENSITIVITY DEGRADATION	1dB Maximum with 20dB KU Output / Input Isolation
ON / OFF CONTROL	TTL "0" = On TTL "1" = Off
DC VOLTAGE & CURRENT:	5.6V at 100mA Maximum 7.6V at 150mA Maximum
CPU SLEEP MODE CURRENT:	0.5mA Maximum
REMOTE CONTROL:	Via RS-232 3.3V 9600N81
TEMPERATURE RANGES:	Operating -10 to +70 Deg C Storage -40 to +85 Deg C

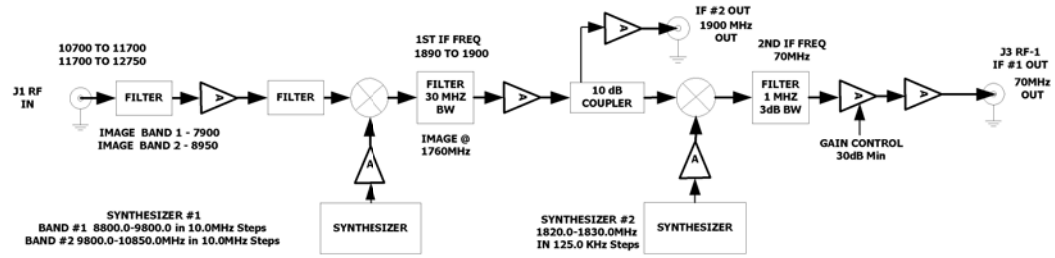

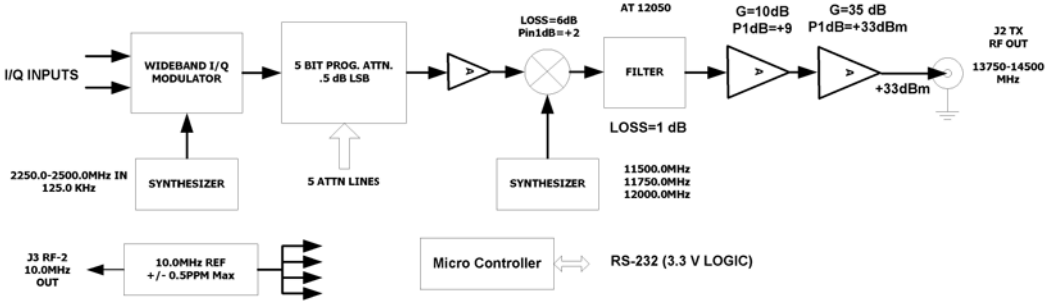

900-50142	
NEXT ASSEMBLY	USED ON
APPLICATION	

UNLESS OTHERWISE SPECIFIED DIMENSIONS ARE IN INCHES. TOLERANCES ARE: FRACTIONS ±1/64 DECIMALS .XX=±.01 .XXX=±.005 ANGLES ±0°30' .XX=±.005 .XXX=±.002
MACHINED EDGES TO BE BROKEN .005 MAX
MATERIAL –
FINISH –
–
DO NOT SCALE DRAWING

APPROVALS		DATE
DRAWN	TONY T.	07/27/04
CHECKED	J. MEDINA	2-01-05
MECH ENGR	GG	2-01-05
ELECT ENGR	JT	2-01-05
PRODUCTION	AM	2-01-05
Q.A.	DB	2-01-05

WV Communications 1176 Tourmaline Dr. Newbury Park, Ca.

Mini KU Up/Down Converter, 2 Watt
MODEL: FC1001

SIZE	CAGE CODE	DWG. NO.	REV
D	1GFQ7	050-50455	A

SCALE NONE SHEET 1 OF 1

050-50455 REV A